Australian Government

Nuclear-based science benefiting all Australians

ANSTO Camperdown Decommissioning Licence Application

Document AC-D-LA-E7a

ANSTO CAMPERDOWN FACILITY DECOMMISSIONING PLAN

(Rev. 1)

Prepared By

Australian Nuclear Science and Technology Organisation

August 2010

REVISION SHEET		Document AC-D-LA-E7a			
		Print name, date and sign or initial			
Revision Number	Description of Revision	Prepared	Checked/ Reviewed	Approved	Agreed
0	Original issue	Algis Lencus Project Manager	Rod Manning Cyclotron Engineer	Alec Kimber ANSTO Camperdown Project Manager	N/A
1	Report revised in sections to reflect SAC assessor comments	Algis Lencus 7 Sep 10	N/A	Alec Kimber 7/9/2010	N/A

CONTENTS

1 PURPOSE AND SCOPE 4
2 DECOMMISSIONING PROJECT 4
2.1 Project Overview 4
2.2 Project Scope 4
2.3 Project Outcomes to ANSTO Camperdown Facility 7
2.4 Project Schedule 7
3 PROJECT RESOURCES 8
4 DECOMMISSIONING TECHNOLOGIES 8
5 TASKS – ENABLING WORK 9
6 TASKS – CLEAR CYCLOTRON VAULT 10
6.1 Overview 10
6.2 Open Cyclotron Tank and Disconnect Services 11
6.3 Removal of Beam Lines 12
6.4 Removal of Components on Side of Cyclotron 14
6.5 Removal of Components above Cyclotron 14
6.6 Removal of Components below Cyclotron 15
6.7 Removal of Cooling Manifolds 16
6.8 Removal of the Cyclotron 16
6.9 Removal of the Triplet Quadrupole 17
7 TASKS – SPECT and PET Beam Rooms Dismantling 18
8 TASKS – CLEAR CONTROL ROOM 18
9 TASKS – REMOVE HOT CELLS 19
10 CYCLOTRON LIFT AND TRANSPORT PLAN 20
10.1 General Overview. 20
10.2 Transport 21
11 STORAGE AND DISPOSITION 22
12 REFERENCES 22
APPENDIX A 23

1 PURPOSE AND SCOPE

The purpose of this Decommissioning Plan is to outline the decommissioning activities associated with the ANSTO Camperdown Facility (formerly known as the National Medical Cyclotron [NMC]). This Plan should be read in conjunction with other plans comprising this decommissioning licence, specifically those relating to radiation protection, emergency arrangements and radioactive materials management.

The scope of this Decommissioning Plan (hereafter called "the plan") includes setting out the scope of the decommissioning project, its timeline, related activities and intended final disposition. These decommissioning issues are addressed in the following headings in this plan.

2 DECOMMISSIONING PROJECT

2.1 Project Overview

The ANSTO Camperdown facility located at Gross St, Camperdown, NSW is to be refurbished to become a leading research facility utilising PET isotopes. The refurbished facility and the research that is to be conducted will be part of a collaborative partnership between ANSTO, the National Imaging Facility and the Brain, Mind and Research Institute (BMRI).

Further information on the existing facility, including the cyclotron is provided in the Appendix.

A number of key systems and components at the ANSTO Camperdown facility are to be removed to allow for the refurbishment. This includes the removal of hot cells, a 30 MeV cyclotron, associated beam lines, target stations and control room equipment to allow for the installation of a new 18 MeV cyclotron and hot cells suited to research activities.

The cyclotron, hotcells and control room cabinets that will be removed are to be safely relocated for storage at the ANSTO LHSTC (Lucas Heights Science and Technology Centre). The majority of beam line components and cyclotron peripherals will remain stored in the basement of the NMC. It is intended that many of the removed components will be re-used by other organisations where possible – this will have the benefit of minimising the generation of waste. This is to occur subject to regulatory approval, subsequent plans and arrangements. Any components that cannot be transferred to other organisations or that do not have a use to ANSTO will be ultimately disposed at existing waste storage facilities at LHSTC after undergoing a destructive waste minimisation process within a 2 year period.

The dismantling and removal process will proceed under two separate stages as described in Section 2.2.

Transport of items from the ANSTO Camperdown facility will be in accordance with Reference 1. The vast majority of components that are to be dismantled will be removed using non-destructive disassembly methods – in most cases, hot cells, cyclotron and beam line components are to be unbolted.

Packaging of any items that are to be removed from the site will be carried out within the ANSTO Camperdown facility and then loaded to a truck for transport to the LHSTC.

2.2 Project Scope

Decommissioning scope is limited to the radiopharmaceutical production areas of ANSTO Camperdown facility ground floor, as indicated in Figure 1.

Many of the tasks relating to the overall decommissioning project are routinely undertaken or are not subject to separate approvals process. This includes the removal of unused or unnecessary small

laboratory equipment and waste. This also includes the modifications to some partition walls and other structures that do not pertain to the cyclotron and its accessories.

Decommissioning will proceed in two separate stages:

Stage 1 scope:

- Removal of 30MeV cyclotron;
- Removal of all beam lines, cyclotron peripherals and target stations within the cyclotron vault (Room 0053) to Camperdown facility basement;
- Removal of GMP Area (Rooms 0037 and 0038) hot cells, which include:
    - A bank of 4 Von Gahlen cells;
    - 2 FDG shielded enclosures; and
    - Single large Von Gahlen cell;
- Removal of target transfer systems from decommissioned target stations to all hot cells including lines etc in trenches (with exception to systems located in the SPECT Beam or Lab rooms – Rooms 0048, 0051 or 0061);
- Removal of control room equipment and cabling (including removal of interlock and alarm system);

Stage 2 scope (subject to a separate approvals process):

- Removal of SPECT Lab (Room 0048) hot cells;
- Removal of SPECT Beam Rooms (Rooms 0051 and 0061) components;

The ground floor scope inclusions are visually presented in Figure 1.

Decommissioning project exclusions:

- Removal of vault room concrete walls or flooring
- Removal of the basement hot cell

NMC Decommissioning Scope

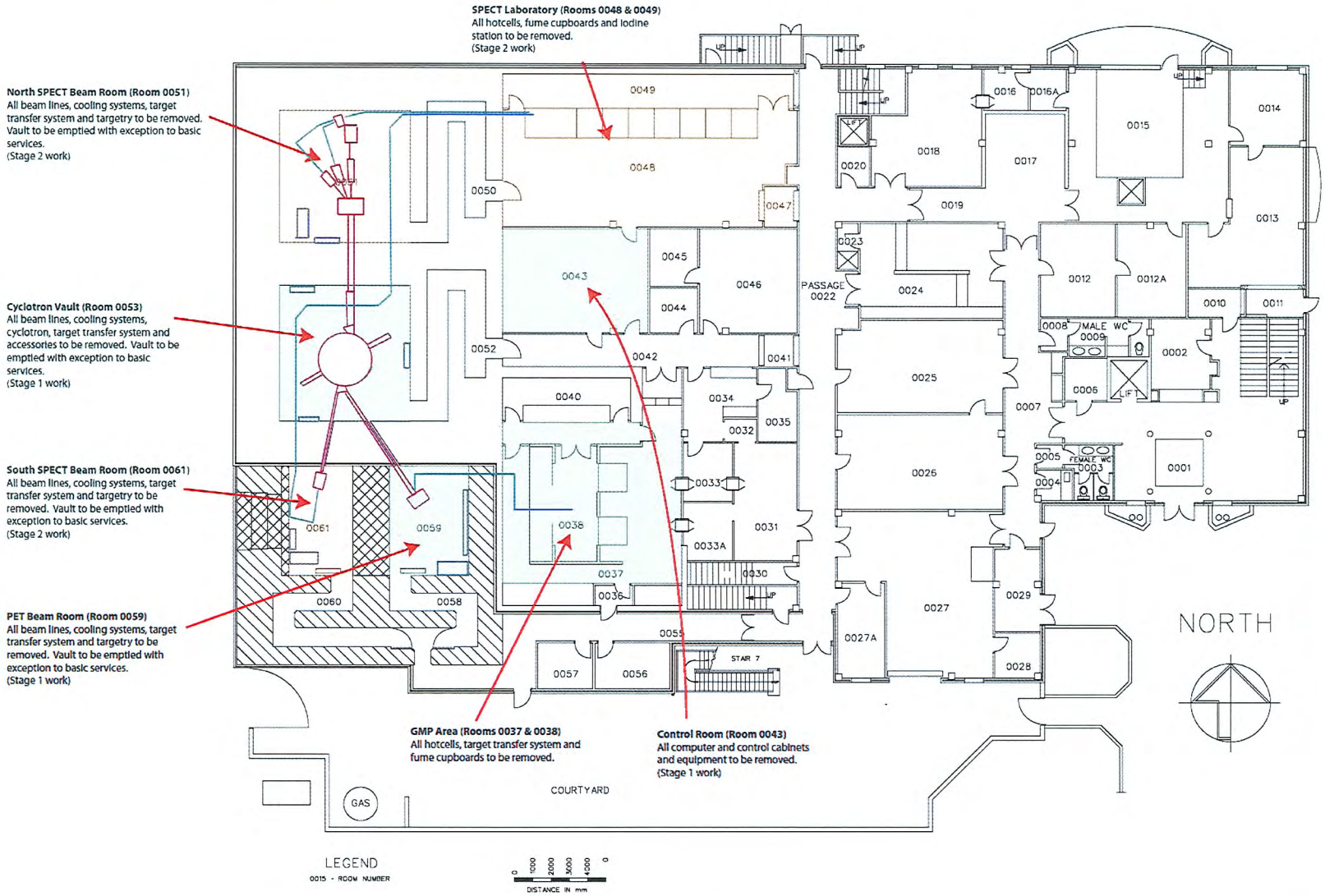

Figure 1: Scope of decommissioning activities

2.3 Project Outcomes to ANSTO Camperdown Facility

The cyclotron vault (Room 0053) and trenches will be emptied of all equipment with exception to the following existing facilities:

- Gas plumbing
- Water plumbing
- Extract ventilation wall penetration

All beam rooms (Rooms 0051, 0059 and 0061) will be emptied of all existing equipment with the exception of:

- Gas plumbing
- Water plumbing

The control room will be emptied of all existing control cabinets and cabling with exception to the main switchboard.

Rooms 0037 and 0038 (GMP Area) will be emptied of the following existing equipment:

- All hotcells; and
- Target transfer conduit from cyclotron.

Room 0048 (SPECT Lab) will be emptied of the following existing equipment:

- All hotcells and services; and
- Iodine processing equipment.

The 1st floor plant room will have the following equipment replaced:

- Chiller (currently used to supply temperature controlled air Room 0038); and
- Air handling unit #1 (currently used to supply air to Room 0038).

There will be no changes to licensed facilities in the basement level.

External decommissioning to the ANSTO Camperdown facility building is limited to the removal of the Room 0054 annex.

2.4 Project Schedule

A detailed project schedule is provided in Reference 5. This schedule is limited to the removal of equipment from the cyclotron vault, PET beam room, and control room. The removal of the hot cells can be carried out independently and is covered in a Safe Working Method Statement (SWMS) in Reference 6.

2.4.1 Major milestones

The following milestones are sought by the project:

Milestone	Date
Stage 1: Remove cyclotron, beam lines and other components from cyclotron vault; clear cyclotron vault; clear PET beam room	November 2010 – January 2011
Stage 1: Final radiological surveys	January 2011
Stage 2: Clear SPECT Beam Rooms and Lab	April – August 2011 (after separate approvals received)
Stage 2: Final radiological surveys	2011
Complete decommissioning activities	August 2011

Stage 2 milestone dates are based on commencing work subsequent to a separate planning and ARPANSA approval. There is minimal benefit in further delaying Stage 2 work for delay and decay purposes as shorter-lived isotopes have long since dissipated.

3 PROJECT RESOURCES

The implementation of this project will use the resources set out in Table 1:

Resource Name	Responsibilities	Reports to
ANSTO Facility Nominee	Ensure facility safety and limit and conditions are maintained	ANSTO CEO
ANSTO Camperdown Project Manager	Manager overall decommissioning and refurbishment work at the ANSTO Camperdown facility. Escalate any issues to ANSTO Senior Management	ANSTO Senior Management and Project Client
ANSTO Decommissioning Project Manager	Project scope, activities, schedule, overall planning and coordinate resources	ANSTO Camperdown Project Manager
ANSTO Cyclotron Engineer	Advise on cyclotron details; supervise on-site activities	ANSTO Decommissioning Project Manager
ANSTO ex-Beam Operator	Backup Cyclotron Engineer.	ANSTO Decommissioning Project Manager
ANSTO Nuclear Analysis Representative	Advise on radiological inventory	ANSTO Decommissioning Project Manager
ANSTO Packaging Approvals Officer	Approve package designs.	ANSTO Decommissioning Project Manager
ANSTO Radiation Protection Adviser	Advise on activities and arrangements for ALARA dose; set dose constraints	Manager, Radiation Protection Services (ANSTO QSERP)
ANSTO Health Physics Surveyor	Advise on-site dose rate levels. Call halt on activities if dose rate is likely to overtake set dose constraints. Clearance on materials or packages sent off-site. Determine packaging requirements.	ANSTO Health Physics Surveyors Leader
ANSTO Engineering Workshop staff	Dismantling of cyclotron and beamline assemblies; Packaging	ANSTO Cyclotron Engineer
ANSTO Waste Operations staff	Movement of materials, cleanup, decontamination and packaging.	ANSTO Cyclotron Engineer
ANSTO Authorised Electrical Isolator	Electrical isolations, prove circuits dead	ANSTO Cyclotron Engineer
ANSTO Contractor Supervisor	Supervise external contractors and specify site-specific hazards.	ANSTO Decommissioning Project Manager
ANSTO OHSE Adviser	Advise on on-site safety. Identify hazards and advise on safety risk controls.	ANSTO Decommissioning Project Manager
External Logistics Contractors	Dismantling and transport of hotcells; removal of control room cabinets; lifting and transport of cyclotron; offloading packages to LHSTC	ANSTO Contractor Supervisor
External Electricians / Electrical Fitters	Disconnection of cabling to control room cabinets	ANSTO Contractor Supervisor
ANSTO Camperdown Facility Officer	Ensure facility safety and limits and conditions are maintained.	ANSTO Camperdown Facility Nominee
Camperdown Security	Maintain on-site security and act as reception to visiting members	ANSTO Camperdown Facility Officer

Table 1 ANSTO Camperdown Decommissioning Project Resources

4 DECOMMISSIONING TECHNOLOGIES

The equipment to be used for the decommissioning scope of work is very conventional.

Cyclotron components and beam lines will be dismantled by unbolting using spanners, screwdrivers or Allen keys in the vast majority of cases. Much of the work has been done in the past for maintenance or upgrade reasons.

Material handling will be achieved with the use of in-situ cranes, portable cranes and hoists, hydraulic tables, machinery skates and trolleys. Platforms and scaffolds are to be used to gain accessibility to areas at height. No hot work is foreseen and will be avoided where possible.

Temporary lighting and power will be used to allow for complete isolation of rooms where dismantling is to proceed.

There is no need for specialised ventilation systems to be installed as the work will be conducted in areas with existing working extract ventilation systems.

Although the majority of equipment has been identified as not containing loose contamination, items and areas will be checked and decontaminated using standard methods and items cleared by ANSTO Health Physics personnel.

Portable dose rate monitors, contamination counters, thermo-luminescent detectors (TLDs) and electronic personnel dosimeters (EPDs) will be used to monitor radiation levels. Portable gamma spectrometers will be used to verify key radionuclides from removed activated materials. The existing barrier procedures and monitoring will be maintained and adhered to.

Packages will be designed in accordance with Reference 1 to safely transport any removed components above exemption levels.

5 TASKS – ENABLING WORK

Prior to removal of significant structures, systems or components, some enabling work is required. This includes the removal of non-fixed equipment and waste. This includes laboratory equipment, such as glassware, scales, counters, non-radioactive chemicals, tools, etc. Additionally, areas outside the cyclotron and beam room vaults are being de-contaminated to ensure a safe working environment. All work is following ANSTO Waste Operations practice and any contaminated waste is transported using approved packages. All clean-up work is performed by trained and qualified ANSTO Waste Operations staff.

Any longer-lived active components will be stored in the basement for future removal.

After areas have been decontaminated, the radiation and contamination classification of areas will be reassessed to ensure controls are commensurate with risks.

This enabling work is in progress at time of writing.

Prior to start of dismantling activities, the cyclotron vault and PET Beam Room will have temporary systems installed. This includes lighting and power. All systems are to be fed from temporary electrical cabling routed to these areas. The justification for this action is to allow for the complete electrical disconnection to all existing systems within the cyclotron vault and PET Beam room. This complete electrical disconnection will eliminate the possibility of any electrical hazards associated with the equipment that is to be dismantled.

Lifting gear, platforms and materials handling equipment will be tested and ready in advance to ensure for safe and efficient dismantling and component movement operations.

Strengthened trench cover plates will be installed to allow for the movement of heavy equipment in the cyclotron vault room.

The existing monitoring, ventilation and extract monitoring systems will be maintained for use throughout all dismantling work.

6 TASKS – CLEAR CYCLOTRON VAULT

6.1 Overview

Clearing the cyclotron vault of all equipment is the main focus of this decommissioning plan as it involves a significant number of components and a heavy lift operation to remove the 55T cyclotron structure. The cyclotron and beam lines inside the cyclotron vault have become activated (radioactive) over the course of its operation. Safe dismantling, transport and storage of these components require assessment to determine appropriate the appropriate methods.

In order to plan for the safe removal of the cyclotron the radiation protection plan (Reference 3) was prepared. Additionally, a characterisation report (Reference 2) was prepared to determine packaging requirement for its transport to the LHSTC.

ANSTO surveys of the beam lines and cyclotron components show that higher levels of activation are limited to only a small number of components. The majority of components are either at background levels or less than 100 µSv/h. This localised distribution of activation will dictate dismantling arrangements.

The approach to the proposed dismantling and removal work is to minimise the level of disassembly required. This approach will have several benefits:

- Simplify removal;
- Decrease dismantling time;
- Reduce exposure to activated items;
- Reduce possibility of loss of components;
- Optimise use of the cyclotron vault internal crane and reduce manual handling; and
- Decrease reassembly time if the components/assemblies are to be re-used.

Dismantling work within the cyclotron vault will initially focus on removal of accessible activated items first so as to reduce dose rate in the vault. This will be followed by the removal of the beam lines surrounding the cyclotron, in order to create space and further remove activated items so as to create a safer working environment for the removal of components around the cyclotron.

All items, with exception to the cyclotron magnetic structure, will be trolleyed to and assessed in a low dose rate scanning area. It is here where activated components can be assessed in isolation to determine future packaging requirements when they will be transported off-site. Beam line components and cyclotron peripherals will then be stored in the facility basement. Storage within the basement will allow further decay to exempt levels or allow for simpler packaging requirements for removal to Lucas Heights. A total of 10 square metres of basement floor space will be used to store the cyclotron vault and PET beam room components. Further detail on this arrangement is provided in the Waste Management Plan (Reference 7). The majority of inactive and uncontaminated items will be transported to LHSTC for storage. Further detail on this process is provided in the Waste Management Plan.

The dismantling work with follow the following overall sequence:

- Remove items that require the opening of the cyclotron tank (this includes the majority of items with a surface dose rate over 100 µSv/h). This action will substantially reduce dose rate in the vault;
- Close cyclotron tank and disconnect all services to cyclotron and beam lines and prove all circuits dead;
- Disassemble and remove beam lines surrounding the cyclotron to provide for safe working space around the cyclotron;
- Remove assemblies above the cyclotron and also the target transfer system;

- Remove platform above cyclotron;
- Remove components surrounding the side of the cyclotron and below the cyclotron;
- Remove cooling manifolds within the cyclotron vault room;
- Clear cabling and prepare to lift cyclotron through roof;
- Lifting crew lifts packaged cyclotron out of vault through roof;
- Pull cabling from other rooms through to cyclotron trench and clear trenches; and
- Clear vault room and survey the room.

In parallel, the Control Room (Room 0043) will be cleared, along with the PET Beam room (Room 0059). The GMP area (Rooms 0037 and 0038) can be cleared independent of the above activities.

Refer to the Dismantling Schedule (Reference 5) and the Safe Working Method Statement (SWMS) (Reference 6) for further detail.

6.2 Open Cyclotron Tank and Disconnect Services

Delicate components internal to the cyclotron tank can only be removed whilst the cyclotron tank is opened. In addition, there are a number of activated items that must be removed prior to transport of the cyclotron to maximise safety and reduce dose to workers. This includes the switching magnets and beam vacuum valves. These items will be removed first with power to the cyclotron available to operate its hydraulic lifting mechanism. Much of these tasks have been performed in the past for maintenance reasons under a much higher dose rate environment.

Figure 2: Cyclotron Tank Opened

Figure 3 Switching magnet removed for previous maintenance

Figure 4 Stripper rod sleeve removed for previous maintenance

Items to be removed at this stage include:

ID number	Item Description
1.2	Internal RF Components
1.3	Switching Magnet and assembly (to North SPECT Beam Room)
1.4	Switching Magnet and assembly (to South SPECT and PET Beam Room)
1.10	Stripper rod carousel assembly (North)
1.11	Stripper rod carousel assembly (South)
1.12	Stripper rod sleeve assembly (North)
1.13	Stripper rod sleeve assembly (South)
1.17	RF Cabinet
1.20	Power and instrumentation cabling and pneumatic lines for services

The cyclotron tank will then be closed for the final time. All power and services will then be removed to the cyclotron and beam line equipment in the vault to eliminate electrical hazards.

6.3 Removal of Beam Lines

After all services have been disconnected, the beam lines will be disassembled to their key assemblies (diagnostic cubes, quadrupoles, Faradays and beam stands). The removal of the beam lines will substantially increase working space within the vault. Any exposed trenches will have temporary cover plates installed to ensure a safe working environment.

Figure 5: SPECT Beam Lines (North and South) in Cyclotron Vault

Figure 6: PET Beam Line in Cyclotron Vault

Items to be removed at this stage include:

ID number	Item Description
	North SPECT Beam Line Components within Cyclotron Vault
2.1	Permanent magnet doublet quadrupole
2.2	Faraday cup assemblies (body only – not including shutter)
2.3	Beam line table and supporting structure
2.4	Cooling Manifold
2.5	Power and instrumentation cabling and pneumatic lines for services
2.6	Vacuum valve
2.7	Faraday cup (shutter assembly only)
2.9	Vacuum pump
2.10	Diagnostic cube
	South SPECT Beam Line Components within Cyclotron Vault
3.1	Permanent magnet doublet quadrupole
3.2	Faraday cup assembly (body only – not including shutter)
3.3	Beam line table and supporting structure
3.4	Cooling Manifold
3.5	Power and instrumentation cabling and pneumatic lines for services
3.6	Vacuum valve
3.7	Faraday cup (shutter assembly only)
3.8	Diagnostic "Cubes" and beam detecting fingers
3.9	Vacuum pump
3.10	Target transfer piping
	PET Beam Line Components within Cyclotron Vault

ID number	Item Description
4.1	Variable doublet quadrupole
4.2	Faraday cup assembly (body only – not including shutter)
4.3	Beam line table and supporting structure
4.4	Cooling Manifold
4.5	Power and instrumentation cabling and pneumatic lines for services
4.6	Vacuum valves
4.7	Faraday cup (shutter only)
4.8	Diagnostic "Cubes" and beam detecting fingers
4.9	Vacuum pumps

6.4 Removal of Components on Side of Cyclotron

The stripper rod arms will be removed, along with the cyclotron main coil cooling lines, which will simply be cut and sealed (after draining with compressed air).

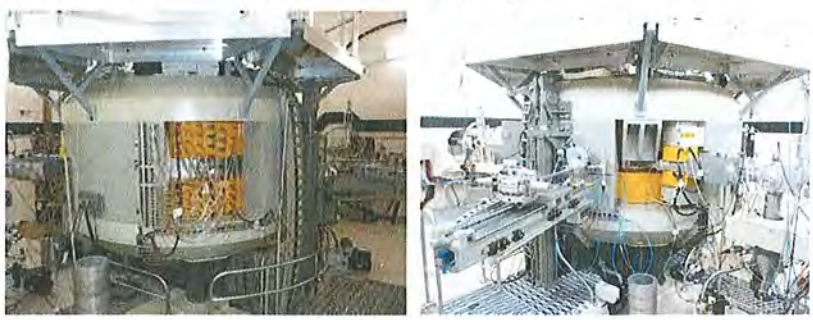

Figure 7: Main Coil Cooling Lines and Stripper Rod Assembly

Items to be removed at this stage include:

ID number	Item Description
1.8	Stripper rod arm assembly (North)
1.9	Stripper rod arm assembly (South)

6.5 Removal of Components above Cyclotron

With the sides of the cyclotron completely cleared, items on the top of the cyclotron will removed. This includes the ion source assembly (after some partial disassembly), vacuum pumps and other smaller components.

A work platform will then be installed into the vault to allow for the removal of the flanged target transport system that is suspended at a 3m height in the vault.

Following the removal of the target transport system, the cyclotron platform and hydraulic lifting jacks will be removed.

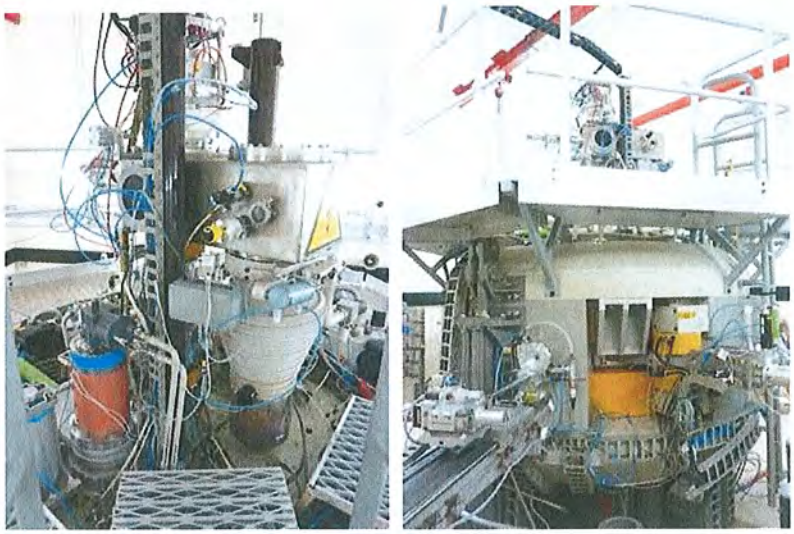

Figure 8: Ion source assembly and cyclotron platform

Items to be removed at this stage include:

ID number	Item Description
1.5	Ion source assembly
1.14	Hydraulic Lifters (2 off)
1.16	Cyclotron Platform
1.18	Vacuum Pumps above cyclotron

6.6 Removal of Components below Cyclotron

Large components below the cyclotron will be removed. This includes the main vacuum pump, cryopumps, helium pumps and plumbing.

Figure 9: Cryopumps under Cyclotron

Items to be removed at this stage include:

ID number	Item Description
1.6	Main Vacuum pump
1.15	Cryogenic pumps (2 off)

6.7 Removal of Cooling Manifolds

The three manifolds used for the cyclotron and beam lines will be cut, plugged and removed after draining with compressed air.

Figure 10: Cooling Manifolds

Items to be removed at this stage include:

ID number	Item Description
1.19	Cooling manifold

6.8 Removal of the Cyclotron

By this stage, the cyclotron vault will be cleared of all major peripheral items. The cyclotron will have been stripped down to its magnetic structure, with all penetrations blanked with gasketted aluminium blanks.

The cyclotron will be removed in the same proven fashion it was installed (Figure 11): by a crane lift where the cyclotron is encapsulated by a weatherproof bag and lifting frame and lifted through the cyclotron vault roof plug. The lift requires the use of a crane with greater than 400t capacity and an oversize truck trailer for transport. A specialist company will be utilised to carry out this task.

Figure 11: Cyclotron installation sequence, including lifting of the roof plug

The 4 roof plugs will then be removed using a large crane located external to the building. The RPA will arrange for confirmatory measures to ensure that there is no possibility of escape of contamination to the external environment prior to the opening of the roof plugs. The crane will then lower a partially assembled lifting frame around the cyclotron. Once the frame is resting over the cyclotron, the remaining sections will be assembled and tightened to secure the cyclotron. The cyclotron will then be unfastened from its four pedestals and then lifted out through the roof and onto a specialised trailer located outside.

Further information on the lift and transport of the cyclotron is provided in Section 0.

Figure 12: Cyclotron wrapped in bag with lifting frame secured in place

Items to be removed at this stage include:

ID number	Item Description
1.1	Cyclotron magnetic structure
1.7	Pedestals (4 off)

6.9 Removal of the Triplet Quadrupole

The triplet quadrupole is a large cylindrical item that is currently positioned in a 400mm diameter tube in the wall separating the cyclotron vault from the North SPECT Beam Room. This quadrupole will be removed subsequent to the removal of the cyclotron. It will be slid out of its housing tube and trolleyed out. The housing tube will then be removed in the same fashion. Both items are heavy and will be removed by experienced and certified riggers with the assistance of lifting gear.

Items to be removed at this stage include:

ID number	Item Description
2.8	Triplet quadrupole (& housing) (in SPECT wall)

6.10 Final tasks

All minor waste will be cleared and all tools and lifting equipment will be removed. There will then be a detailed radiation survey as prescribed by the RPA.

7 TASKS – SPECT and PET Beam Rooms Dismantling

The SPECT Beam Room components will be dismantled as part of Stage 2 work. Detailed plans and a safety assessment will be developed prior to this time. These areas will continue to be surveyed and associated ventilation and monitoring systems will be maintained until after the area is cleared.

The PET Beam Room components are to be removed subsequent to the clearing of the cyclotron vault room. There is minimal activation in this beam room (the highest, which are two target stations, register approximately 30 μSv/h at contact). The remaining PET Beam Room components are to be packaged in assemblies in the same fashion as components in the Cyclotron Vault. The primary hazard in this room relates to manual handling. The same precautions utilised in the cyclotron vault apply to the PET room.

Items to be removed from the PET Beam Room at this stage include:

ID number	Item Description
	PET Beam Room Components:
5.1	Beam line (inc. PMQ)
5.2	Target station Rack & Shield
5.3	Support table and structure
5.4	Power and instrumentation cabling and pneumatic lines for services
5.5	Cooling manifold
5.6	Faraday Cooling Heat Exchanger

After the tasks in the PET beam room are complete all minor waste will be cleared and all tools and lifting equipment will be removed. There will then be a radiation survey as prescribed by the RPA.

8 TASKS – CLEAR CONTROL ROOM

All control cabling and control room cabinets are to be removed. The existing interlock alarm system will be completely disabled and removed in its entirety to facilitate installation of a new system for the replacement cyclotron.

Items to be removed at this stage include:

ID number	Item Description
	Control Room components:
6.1	IBA cabinets and electronics
6.2	Cabling to IBA electronics
6.3	SCADA computer and cabling
6.4	Furniture

6.5	Interlock and alarm system cabling and equipment

After the tasks in the control room are complete all minor waste will be cleared and all tools and lifting equipment will be removed. This is a non-radiation area but there will be a radiation survey as prescribed by the RPA.

9 TASKS – REMOVE HOT CELLS

A total of 16 hotcells are intended for dismantling and removal from the ANSTO Camperdown facility. These include:

Stage 1 work

- A bank of 4 Von Gahlen (Dutch brand) hotcells in the GMP Area (Rooms 0037 and 0038);
- 2 shielded FDG enclosures in the GMP Area (Rooms 0037 and 0038);
- 1 large Von Gahlen hotcell in the GMP Area (Rooms 0037 and 0038);

Stage 2 work

- A bank of 9 hotcells in the SPECT Lab (Room 0048); and
- 1 iodine processing plant in the SPECT Lab (Room 0048).

All hot cells in Rooms 0037 and 0038 have been decontaminated and surveyed with nil activation and contamination. As there is no contamination or activation relating to these cells, the hazards relating to the removal is limited to standard industrial safety, mostly relating to manual handling and lifting. Two of the four Von Gahlen hotcells from Room 0038 will be delivered to an external Australian organisation. Because there is no radiation or contamination associated with these hotcells, packaging requirements will be limited to ensuring the hotcells are secure, free from contamination from the outside environment (as they will be used in a clean facility) and free from potential damage during transport.

The bank of 9 hotcells and the iodine processing plant in the SPECT Production Area (Room 0048) will be removed as part of Stage 2 work, where detailed plans and a safety assessment will be developed. These areas will continue to be surveyed and associated ventilation and monitoring systems will be maintained until after the area is cleared..

The removal of all cells will follow the same overall procedure, but there are small differences to Von Gahlen cells from the others: use of lead bricks for shielding as opposed to molten lead filled steel lined panels. The overall procedure for removal is:

1. Confirm that hot cells are uncontaminated;
2. Isolate services;
3. Remove ventilation ductwork;
4. Remove panelling above and below hot cell to reveal structure and services and review;
5. For Von Gahlen cells, remove hot cell panelling to reveal lead brick shielding arrangement;
6. Remove hot cell doors;
7. Remove through points between hotcells via hot cell liner;
8. Remove inner hot cell liner;
9. Remove top panel (requires removal of lead bricks/sheets for Von Gahlen cells);
10. Remove side panels (requires removal of lead bricks/sheets for Von Gahlen cells);
11. Remove bottom panel (requires removal of lead bricks/sheets for Von Gahlen cells); and
12. Disconnect hot cell structural frame from its support structure and clear area.

A health physics surveyor is required to check hot cell components at all stages to ensure there is no contamination. Any contamination that is found will be dealt with in accordance with the Waste Operations section standard procedures and subject to Health Physics surveillance. The main hazards are otherwise related to the handling of heavy items – therefore riggers experienced with such work will be utilised for the task along with the appropriate equipment to handle the loads.

Detailed Safe Work Method Statement (SWMS) will be developed for the hazardous tasks.

Items to be removed at this stage include:

ID number	Item Description
	GMP area components:
7.1	4 Von Gahlen Hotcells
7.2	1 large Von Gahlen Hotcell
7.3	2 FDG shielded enclosures

After the tasks in the GMP area are complete all minor waste will be cleared and all tools and lifting equipment will be removed. It is not expected that there will be any radiation or contamination but as it has been a radiation area there will be a survey to prove it is clear.

10 CYCLOTRON LIFT AND TRANSPORT PLAN

10.1 General Overview.

The removal of the cyclotron is a heavy lift operation including the removal of the roof plug, which consists of 4 reinforced concrete slabs. The cyclotron is 55 tonnes, but due to the distance of the cyclotron from a clear area adjacent to the building, a crane with a 400 tonne lifting capacity is required. The remove of the cyclotron is the reverse of how it was originally installed. Above the roof plug is a corrugated sheet metal roof to prevent ingress of weather through the roof plugs.

Further information is provided in Reference 4.

The overall process will be as follows:

- Remove corrugated sheet metal roof;
- Remove 4 reinforced concrete slabs that form the roof plug;
- Assemble the cyclotron lifting frame and secure to cyclotron;
- Remove existing 30meV cyclotron and place on specialised wide load trailer;
- Replace vault roof;
- Transport to LHSTC under the control of a specialist contracting company experienced with this type of heavy load; and
- Remove from truck using hydraulic jacks and lower to storage point.

The crane will be sited outside the lease boundary of the ANSTO Camperdown facility and the impact of work will need to be managed. Affected stakeholders will be contacted to allow for appropriate arrangements to be made.

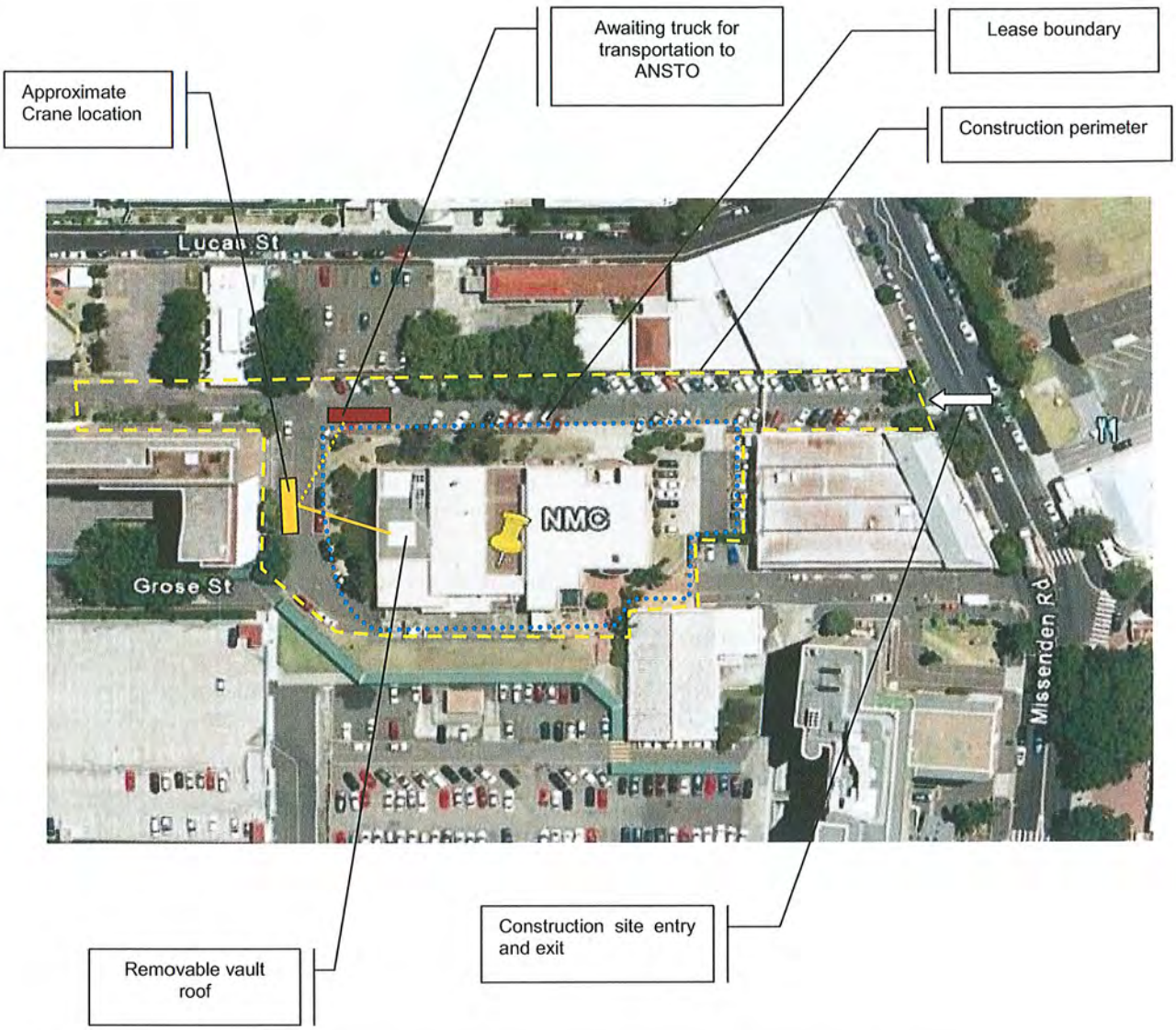

Site function plan for removal of existing cyclotron 30meV

10.2 Transport

The transport arrangements will be planned and managed by a specialist company experienced in heavy lifting and transport. The cyclotron will be transported to the LHSTC by truck and trailer. A specialised 3.2m wide trailer is planned to carry the 2.7m diameter cyclotron. This is an oversize load and will require an escort vehicle to lead the truck to alert other road users. The cyclotron will be transported to dangerous goods rulings as a minimum and the appropriate authorities shall be notified. Appropriate markings will be applied to any radioactive packages to conform to Reference 1. Due to the size, weight and type of cargo, an appropriate route will be used to safely transport to LHSTC.

Figure 13 Cyclotron on trailer for transport

11 STORAGE AND DISPOSITION

The cyclotron is to be stored at ANSTO Hut 36 at the LHSTC. This building is managed by ANSTO Waste Operations.

The cyclotron peripherals and beam line components are to be stored at the Camperdown facility basement, which currently serves as a waste storage area. The area will be configured to accommodate the 10 square metres of floor space required to store the components removed from the cyclotron vault and PET beam room. The components will be assessed for potential re-use for the new facility. All other unnecessary components will be transported to LHSTC after a decay period for waste minimisation and clearance as per standard ANSTO practice.

All removed components will be barcode labelled as part of an inventory database system to assist with tracking. The barcode system will include descriptive details such as item description, dose rate at contact, restrictive radionuclide, weight, assessment date etc.

Any activated items transported to LHSTC will be appropriate packaged and arranged as per Reference 1.

12 REFERENCES

1. ARPANSA Code of Practice, "Safe Transport of Radioactive Material", Radiation Protection Series 2, 2008 Edition
2. Memorandum from Fernando Esposto to Algis Lencus, NASDOC RP10-0154
3. ANSTO Camperdown Facility Radiation Protection Plan, AC-D-LA-E6c
4. "Cyclotron Removal and Transport", Toll Project Services
5. Cyclotron Removal Schedule
6. Safe Working Method Statement for the Removal of Hot Cells in Rooms 0037 and 0038
7. ANSTO Camperdown Facility Waste Management Plan, AC-D-LA-E6d

APPENDIX A. ANSTO CAMPERDOWN FACILITY DESCRIPTION

A.1. Location

The National Medical Cyclotron (NMC) is near to Royal Prince Alfred Hospital (RPAH). The facility is a stand-alone building, bounded on the north side by Lucas Street Carpark, extending on its southern side to Grose St. Its eastern boundary is 75m west of Missenden Rd, in line with the pedestrian crossing in front of the hospital security gates on Missenden Rd. The total site occupies an area of less than 2000 m^2.

The surrounding land is largely occupied by facilities of RPAH with a residential college of Sydney University and limited residential houses also being in the vicinity.

Figure 14: Aerial photograph highlighting the location of the NMC building

A.2. Purpose of Facility

The purpose of the cyclotron (shown in the figure below) was to produce proton beams of various energies and intensities and then to bombard a variety of solid, liquid and gaseous targets with the beams. The energy of the protons is sufficient to cause nuclear reactions in the various target materials resulting in the production of radionuclides.

Figure 15: IBA 30MeV cyclotron inside the NMC building

The targets were subsequently chemically processed into medical-grade radiochemicals or radiopharmaceuticals. Generally radiochemicals were transported to ANSTO radiopharmaceutical laboratories at the LHSTC and used to manufacture radiopharmaceuticals for Australia-wide distribution. Radiopharmaceuticals manufactured directly at the facility were usually based on radionuclides with short half-lives and were largely used in Sydney with some limited interstate shipment.

The ultimate use of all radioactive material manufactured in the facility was in radiopharmaceuticals that are used to diagnose and treat a variety of human medical conditions.

A.3. History

The NMC, housing the IBA C30 cyclotron, was constructed between 1987 and 1990. The first proton beam was produced in mid-1991 and limited radionuclide production began some months later.

In 1996 an addition of the south beam rooms was made and commissioned in 1997.

Production of a radiochemical based on the radionuclide iodine-123 began in October 1991. Production of radiopharmaceuticals based on the positron-emitting radionuclide fluorine-18 (a so-called PET radiopharmaceutical) began in September 1992 and ammonia based on nitrogen-13 in November 1992 and closed down in 2004. Production of radiochemical solutions of thallium-201 commenced in March 1993 and of gallium-67 in March 1994. Very small quantities of other radiopharmaceuticals and radiochemicals have been manufactured at various times since 1993 but the principal products remain unchanged since that time apart from PET.

The PET targets and processing plant has been sitting idle in the beam room and the clean room since February 2005.

The cyclotron facility was shutdown in October 2009 and there has been no further production of isotopes since that time.

A.4. Building Use

The cyclotron is housed in a central vault (Room 0053) with a single beam room (0051) to the north and two smaller beam rooms to the south (Rooms 0059 and 0061). Personnel access to the vault and beam rooms is via concrete mazes which provide neutron shielding when the cyclotron was operating and targets were bombarded.

Within the NMC controlled area, there were two main production areas supported by adjacent Quality Control laboratories and product packing and despatch areas.

The Radiochemical Production Area, also called the SPECT Production Area (Room 0048) was used to manufacture radiopharmaceutical-grade radiochemical solutions containing the radionuclides thallium-201, gallium-67, copper-64 and iodine-123.

The GMP Area (Rooms 0037 and 0038) was originally used for the manufacture of a PET fluorine-18 product called FDG. Recently it was used to aseptically manufacture a radiopharmaceutical based on iodine-123.

A.5. Building Description

The building is a three level concrete structure with a brick exterior. The basement level includes a separate trench leading from the cyclotron control room to the cyclotron vault as well as waste storage areas. The ground floor contains the rooms for the cyclotron and production. The first floor contains support office accommodation and has the plant rooms.

The basement consists of two rooms. The first room L1001 which was part of the original construction houses three delay tanks for the processing of liquid waste and the goods lifts. The second room L1002 is a store area for waste (solid), parts and documents.

The ground floor is divided into four broad zones;

- The cyclotron rooms (cyclotron vault (0053) and beam rooms (0051, 0059 and 0061));
- The production suites;
- The ancillary zone comprising the blue area corridor, laboratories, target prep room, basement, workshop, and barrier; and
- Administration area, toilet amenities, offices and reception.

The Cyclotron rooms house the cyclotron and the solid, liquid and gas target stations. The production suites consist of a number of laboratories and a clean room which house the equipment necessary to conduct the chemical processing and quality control functions. The ancillary zone contains equipment and storage areas necessary for the manufacturing and testing of radio-isotopes. The administration area contains the building reception, amenities, offices, dispatch, stores and workshops.

The first floor is above the operating areas and houses all the offices and work stations and amenities (toilets, showers and lunch room) for the production and engineering staff stationed at the facility.

In addition, there are plant rooms on the first floor. Room 1040 contains the air compressors, the supply side air handling units (AHU), the air conditioning and the chilled water pumps, which with the air-cooled chiller situated outside, comprise the building cooling services. In addition there are the potable and non-potable hot water heaters and a boiler for the AHUs. Room 1043 houses the diesel generator, which provides emergency power, in the event of a power failure. Room 1044 houses the fans and filters for the exhaust air from the controlled operating area and the 'house' vacuum system.

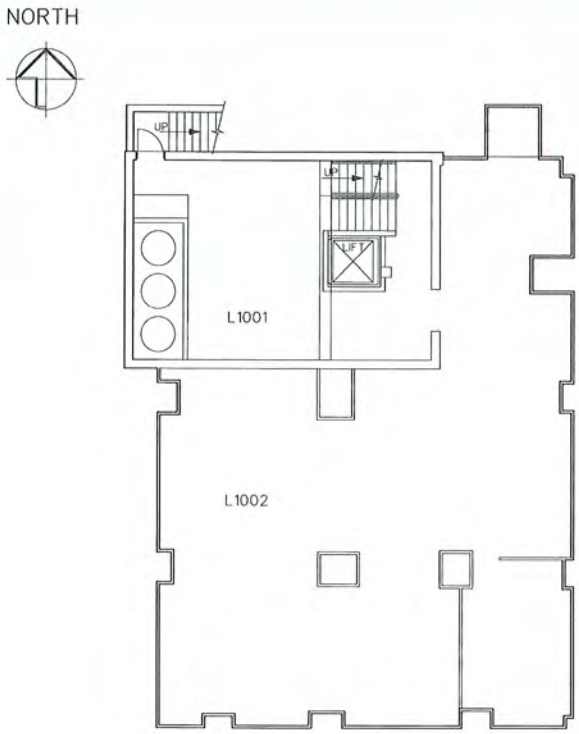

BASEMENT FLOOR PLAN

LEGEND
0015 - ROOM NUMBER

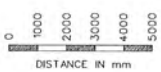

Room Number	Room name
L1001	Trade Waste Treatment room
L1002	Decaying Waste storage room

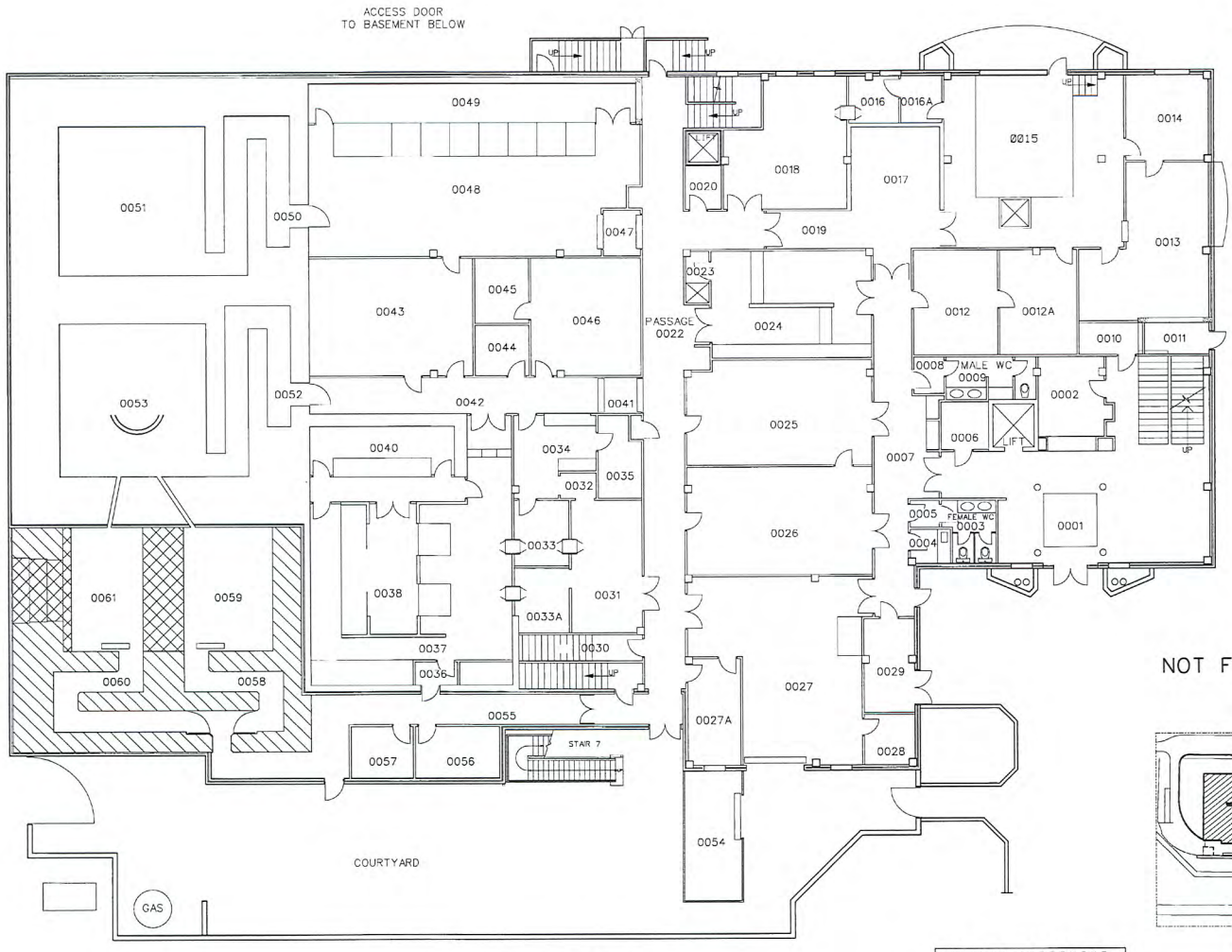

Room Number	Room Name	Room Number	Room Name
0001	Building Foyer	0033	Production parts workshop
0002	Reception / Security area	0033A	ICP prep room
0003	Female toilets	0034	Store room
0004	Cleaners store room	0035	Store room
0005	Female Toilet ante room	0036	Clean room air lock
0006	Lift motor room	0037	mIBG production room
0007	Corridor white area	0038	Back of cells
0008	Male Toilet Ante room	0039	Airlock
0009	Male Toilet	0040	Ion Source Power supply
0010	Computer Sever Room	0041	Airlock
0011	Fire booster pump room	0042	Corridor
0012 / 0012A	Health Physics Office area	0043	Control Room
0013	Raw Material Store	0044	Workshop
0014	Electrical Workshop	0045	Record room
0015	Dock area	0046	QC Wet Chemistry lab
0016 / 0016A	Packed product storage	0047	Airlock
0017	Dispatch packing area	0048	Radiochemical Production Lab
0018	Micro biological lab (not Used)	0049	Hot Cell Service area
0019	Material / Equipment barrier	0050	Beam room Maze
0020	Blue area Laundry	0051	Side 2 Beam Room
0022	Corridor	0052	Vault Maze
0023	Shower	0053	Cyclotron Vault
0024	Personal Barrier	0054	Welding workshop
0025	QC instrument lab	0055	Corridor
0026	Target Preparation lab	0056	Vacuum Pump service room
0027	Mechanical Workshop	0057	Store room
0027A	Workshop	0058	G/L target room maze
0028	Mechanic Workshop office	0059	G/L target room
0029	Electrical distribution room	0060	Side 1 beam room maze
0030	Emergency Stairs	0061	Side 1 Beam room
0031	ICP lab		
0032	Ante room		

LEGEND
0015 - ROOM NUMBER

0 1000 2000 3000 4000 5000
DISTANCE IN mm

GROUND FLOOR PLAN

CLIENT AGREEMENT
PRINT NAME : DENNIS ALBURY
SIGN NAME : D. Albury DATE 17 5 /04

NOT F

SITE PLAN
SCALE: N.T.S.

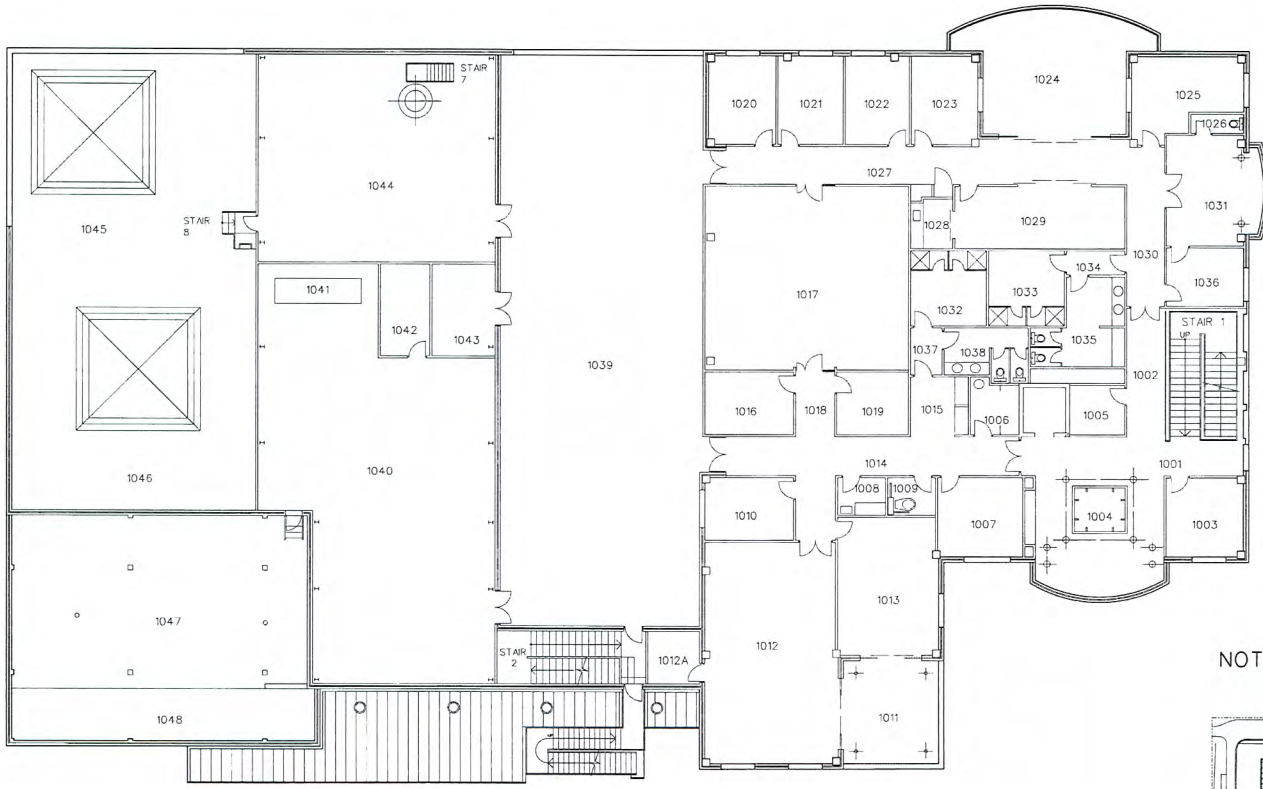

Room Number	Room Name	Room Number	Room Name
1001	Upstairs Landing	1024	North Terrace
1002	Corridor	1025	Office
1003	Office	1026	Toilet
1004	Landing and display area	1027	Corridor
1005	Work room	1028	Kitchen
1006	First Aid room	1029	Dining room
1007	Office	1030	Corridor
1008	Cleaners store	1031	Office
1009	Disabled toilet	1032	Female Showers
1010	Office	1033	Male Showers
1011	South Terrace	1034	Male toilet ante room
1012 / 1012A	Conference room	1035	Male toilets
1013	Office	1036	Office
1014	Corridor	1037	Female Toilets
1015	Alcove	1038	Female Ante room
1016	Office	1039	Western terrace
1017	Open plan office area	1040	Plant room Supply air AHUs
1018	Corridor	1042	Boiler room
1019	Office	1043	Emergency power generator
1020	Office	1044	Stack room
1021	Office	1045	Roof above Side 2 beam room
1022	Office	1046	Roof above Vault
1023	Office	1047 / 1048	Ceiling space above Side 1 beam rooms

NOT FOR CONSTRUCTION

LEGEND

0015 - ROOM NUMBER

FIRST FLOOR FLOOR PLAN

0 1000 2000 3000 4000 5000

DISTANCE N mm

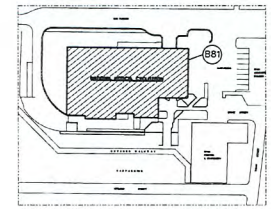

NORTH

A.6. Controlled Areas

The designations for each area within the facility were as follows.

Area	Radiation	Contamination
Cyclotron and Beam rooms (0050, 0051, 0052, 0053, 0058, 0059, 0060 & 0061)	Red	Blue
Production areas and Quality control Laboratories	Blue	Blue

Table 2: Summary of Controlled Area Classifications

The controlled area within the radiopharmaceuticals operations was designated a "Blue" contamination area. This indicates that levels of contamination would be such that operators could exceed the Annual Limit Intake (ALI) for members of the public but would not normally exceed one-third of the ALI for radiation workers.

The controlled area within the radiopharmaceuticals operations was designated a "Blue" radiation area. This indicated that radiation levels would be such that operators would not exceed 30% of the permitted annual whole body dose for radiation workers. The wearing of personal dosimeters (film badges) and Electronic Personal Dosimeters (EPDs) was mandatory within the area.

To minimise the possibility of transfer of contamination from the area by its use as a through route, only one personnel access point was permitted. Personal monitoring and decontamination equipment were provided at that point.

The vault and beam rooms were designated as "Red" radiation areas. This indicated that radiation levels were such that operators could receive above 30% of the permitted annual whole body dose for radiation workers.

The designations throughout the building are to be revised down to reflect current conditions (shutdown cyclotron, unused beam lines and decontaminated production areas and quality control laboratories), subject to advice by the ANSTO Radiation Protection Adviser.

A.7. Cyclotron, Beam Transport and Laboratory Facilities

The following sub-sections describe in more detail the areas where decommissioning works are intended.

A.7.1 Cyclotron Power Supply Room (0040) and Control Room (0043)

Rooms 0040 and 0043 contain the following equipment:

- Main cyclotron and beam lines control console.
- PLC controlling cyclotron and beam lines (slaved to the Interlock and Alarm PLC).
- System vacuum gauges.
- Ion source power supply.
- First and second stage RF amplifiers for beam acceleration.
- Main magnet power supply.
- Switching magnets power supplies.
- Steering and quadrupole magnets' power supplies.
- Interlock and Alarm system PLC.

- Gas / Liquid target load/unload PLC.
- Active and non-active cooling systems monitor.

There is no contamination or radiation in these areas.

A.7.2 Layout of Cyclotron Vault and Beam Rooms

The cyclotron is housed in the Cyclotron Vault (Room 0053), which is neighboured by 3 additional beam room vaults as shown in Figure 16. The cyclotron is 2.7m in diameter and is connected to 3 beam lines, which, in turn, are connected to target stations for the irradiation of product.

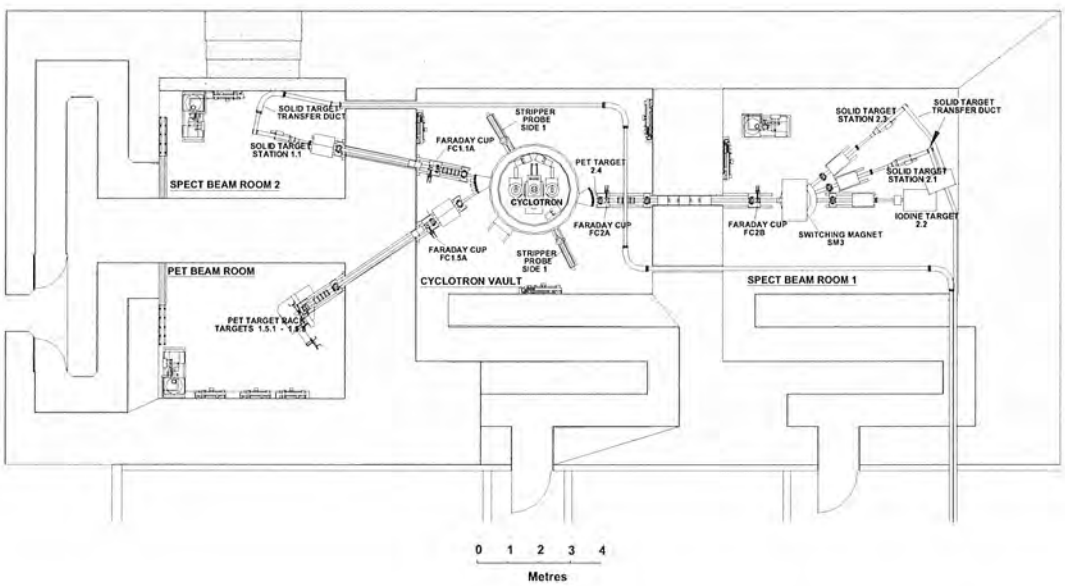

Figure 16: Cyclotron and beam room vaults

The 30 MeV cyclotron was supplied to ANSTO by IBA (Ion Beam Applications, a company based in Belgium) complete with full drawing set and specifications.

Figure 17 shows the arrangement of components that make up the beam line to North SPECT Beam Room. Beam lines to South SPECT Beam Room and the PET Beam Room include similar components, with exception to the triplet quadrupole and large switching magnet.

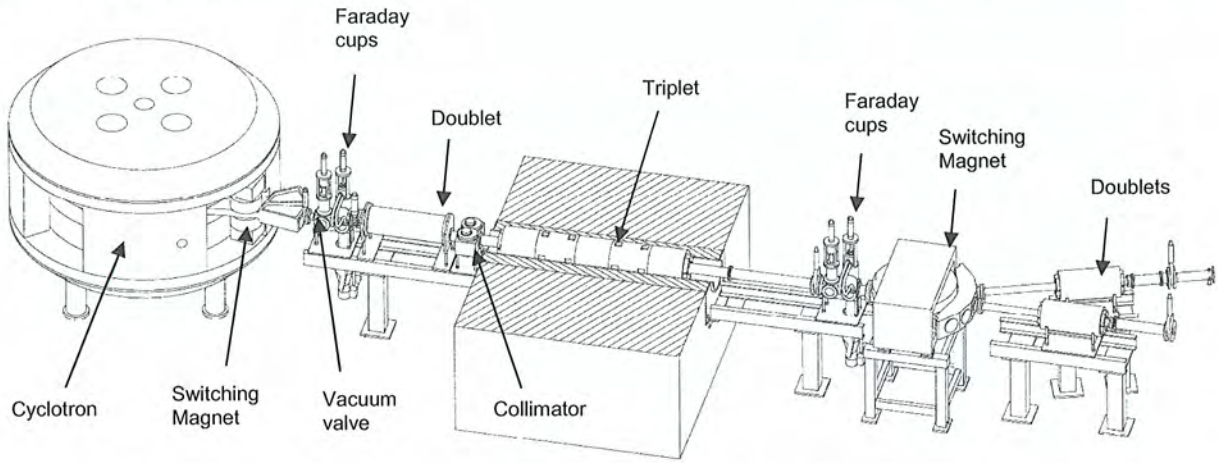

Figure 17: Cyclotron and beam transport line to the North SPECT Beam Room

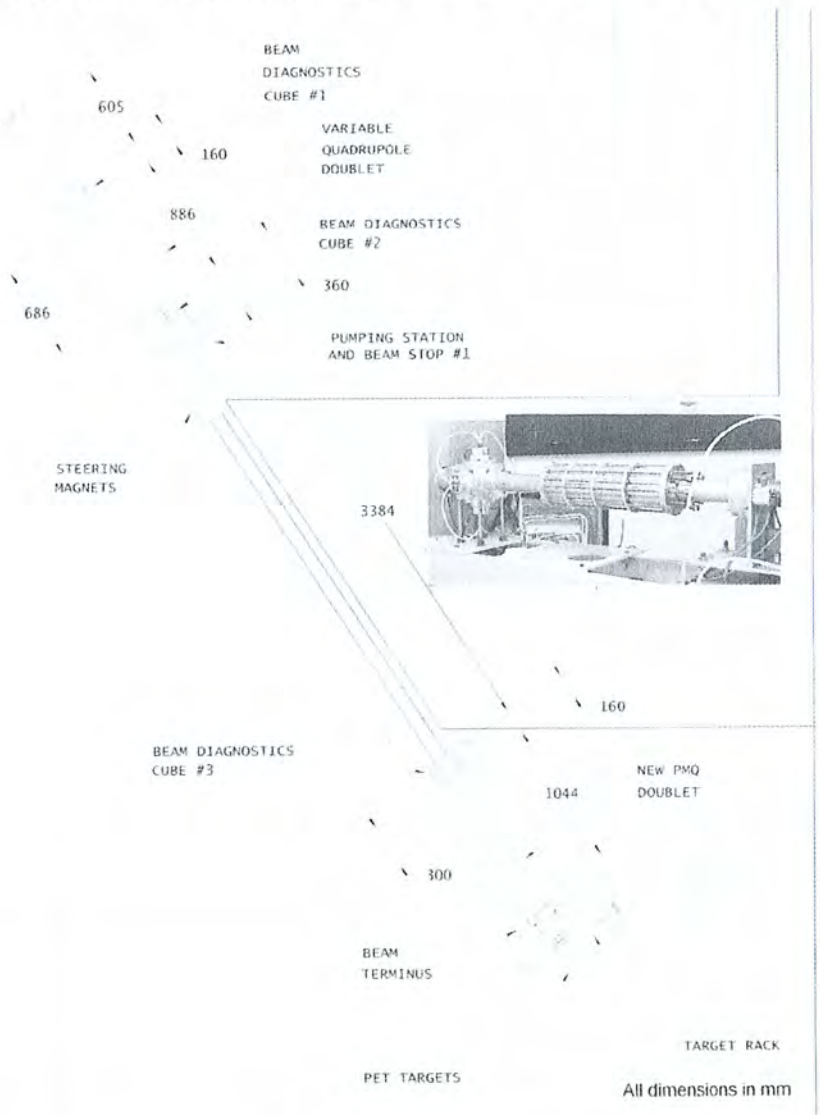

Figure 18: Beam Transport Line to the PET Target Station

A.7.3 Beam Rooms

The solid target stations in the beam rooms were used to bombard targets of thallium-203 or zinc-68 metal which had been electrodeposited on thick copper target plates. Subsequent processing of these targets produced radiochemical solutions of thallium-201 or gallium-67.

There are two solid target stations in north beam room (room 0051) and one in south beam room (room 0061). All are of essentially the same ANSTO design based on an original design by IBA. Each station is linked by a solid target transfer duct to Cell 1 in the SPECT Laboratory (Room 0048).

Before a target plate could be bombarded it was loaded into a service housing called a shuttle. An assembled shuttle is two-part hollow aluminium box, open at one end and having square plastic ends fitted with felt washers, which permit pneumatic transfer of the shuttle to the target station via a transfer duct. Within the shuttle, the target plate lies lengthways and covers a cooling water channel in the aluminium housing which has two holes to the exterior of the shuttle.

The cyclotron control system would shut the in-cell transfer station and pneumatically transfer the shuttle to the required target station.

When loaded into the target station, the open end of the shuttle was pneumatically forced against the end of the beam line forming a vacuum-tight seal and a vacuum valve opened to the beam line. Water cooling lines are pneumatically moved into the holes in one half of the shuttle to provide cooling.

The following equipment is located in the North SPECT Beam room (Room 0051):

- A quadrupole (focusing) magnet (in the vault/beam room wall).
- A Faraday Cup.
- Main beam line and switch magnet to direct the beam into one of three directions.
- Diffusion pump to maintain vacuum in beam line.
- Three further quadrupole magnets
- Two solid target stations for the production of thallium-201 and gallium-67.
- Xenon-124 gas target for iodine-123 production.
- Active cooling system to cool the Faraday Cup and targets.

The following equipment is located in the South SPECT beam room (Room 0061):

- A quadrupole (focusing) magnet
- Single solid target station.
- Active cooling system
- Components of the shuttle transfer system

The following equipment is located in the PET Beam room (Room 0059):

- A quadrupole (focusing) magnet
- A rack target accommodating up to 8 targets, which can be individually placed in the beam.
- Active cooling system.

A.7.4 SPECT Lab (Room 0048)

The SPECT Lab houses hot cells, fume cupboards and a purpose-built shielded enclosure located behind Cell 3.

The SPECT Cells comprise eight adjacent cells in Room 0048. There are nine lead glass windows as the western-most cell is a double-sized cell. Each cell consists of an inner sealed metal liner resting

on a metal frame. Cells 3 to 9 inclusive have a plastic liner inside the described metal liner. Each cell is fitted with four gaitered tongs and surrounded by steel-encased lead shielding. The shielding is 100 mm thick on the fronts of Cells 3, 4, 7, 8 and 9 and 150 mm on the fronts of cells 1, 2, 5 and 6. The tong ball thickness is 100 mm on all cells. The floor beneath the liners has 100 mm of lead shielding. There is 50 mm of lead shielding between cells and 50 mm on the cell roof. The back of the cells is shielded by 50 mm of lead in the form of moveable doors, which are hinged. These doors allow personnel access to the cells via removable panels in the rear of the cell liners.

Behind the liners, but inside the shielding, is an inter-cell trolley that runs on rails inside a tunnel. A door in each liner gives access to the trolley. The shielding between cells extends only to this tunnel.

Four fume cupboards are located along the southern wall of the room. The three adjacent units were used for chemical activities associated with radiochemical preparation. The single fume cupboard located opposite Cell 7 was largely used for adjusting the pH of the final active thallium-201 solution, prior to filtration, dispensing and autoclaving in Cell 2.

A purpose-built shielded enclosure was installed in 1996 behind Cell 3 to house the cryogenically operated enriched Iodine Plant (xenon-124 storage facility), which was part of the iodine-123 production system. The enclosure has shielding equivalent to 50 mm of lead, a hinged door for access and an internal drawer that allows the contained gas plant to be moved out of the enclosure for maintenance.

A.7.5 GMP Area (Rooms 0037 and 0038)

The GMP Area contains seven shielded hot cells, two fume cupboards and a laminar flow cabinet.

The hot cells fall into 3 classes viz

1. Four smaller hot cells made by Von Gahlen (a Dutch firm) in January 1998.
2. A single large Von Gahlen hot cell which was installed in January 2000 to contain a robotic dispenser.
3. Two adjacent smaller shielded enclosures designed and installed by ANSTO in late 1999.

Von Gahlen Cells

All cells have shielding equivalent to 75 mm of lead on the cell fronts with 60 mm shielding on the floor and roof. There is 50 mm of shielding between the cells. All cells have lead glass windows with shielding equivalent to 75 mm of lead. The cells are numbered 1 to 4 from north to south. Cells 1 and 2 have front door access only. Cells 3 and 4 have front door access and ports for rear tong systems.

Large Von Gahlen Hot Cell (Dispensing cell)

This larger hot cell has 75 mm of lead shielding equivalent. Services provided include a viewing window, power, helium and compressed air. The cell was built to house an automated aseptic dispenser.

Shielded Enclosures (Box 1 and 2)

These provide shielding of 75 mm of lead equivalent and are S/S lined. Access is via a front hinged door, which allows access to a drawer in which the module sits. Other services include power, helium and compressed air.

Fume Cupboards

The two fume cupboards in room 0037 were used as storage areas for reagents used in radiopharmaceutical production.

Laminar Flow Cabinet

The laminar flow / biohazard on the southern wall of Room 0037 was used to perform aseptic dispensing operations.

A.7.6 Quality Control Wet Chemistry (Rm 0048)

The Quality Control Wet Chemistry Lab has two fume cupboards previously used for chemical testing of unsealed radiochemicals.

A.7.7 Target Preparation Laboratory (Rm 0026)

The laboratory contains three fume cupboards (1 to 3 from west to east) and one glove box.

A.8. Cyclotron

A.8.1 Cyclotron Components

The cyclotron consists of the following main components:

a. **Magnetic structure**: the bulk of the cyclotron, weighing approximately 55 tonnes. The magnetic structure consists of a main coil with copper windings and the magnetic steel.

b. **Vacuum chamber**: the vacuum chamber is aluminium and encompasses the magnetic poles.

c. **RF system**: includes the copper dees / electrodes and the radiofrequency amplifier and tuning system. The amplifier is stored in a cabinet adjacent to the cyclotron.

d. **Ion source and axial injection system**: used to inject negative ions into the cyclotron. This system is situated above the cyclotron.

e. **Extraction system**: includes the stripper rods and foils, which are inserted into the vacuum chamber.

f. **Beam transport**: includes the beam lines, Faraday cups, target station, switching and focussing magnets.

g. **Water cooling**: utilised to cool cyclotron components, including the main coil and Faraday cups.

h. **Power**: includes high voltage power supply to the ion source.

i. **Control system**: the majority of cyclotron readings and functions can be controlled from the Control Room.

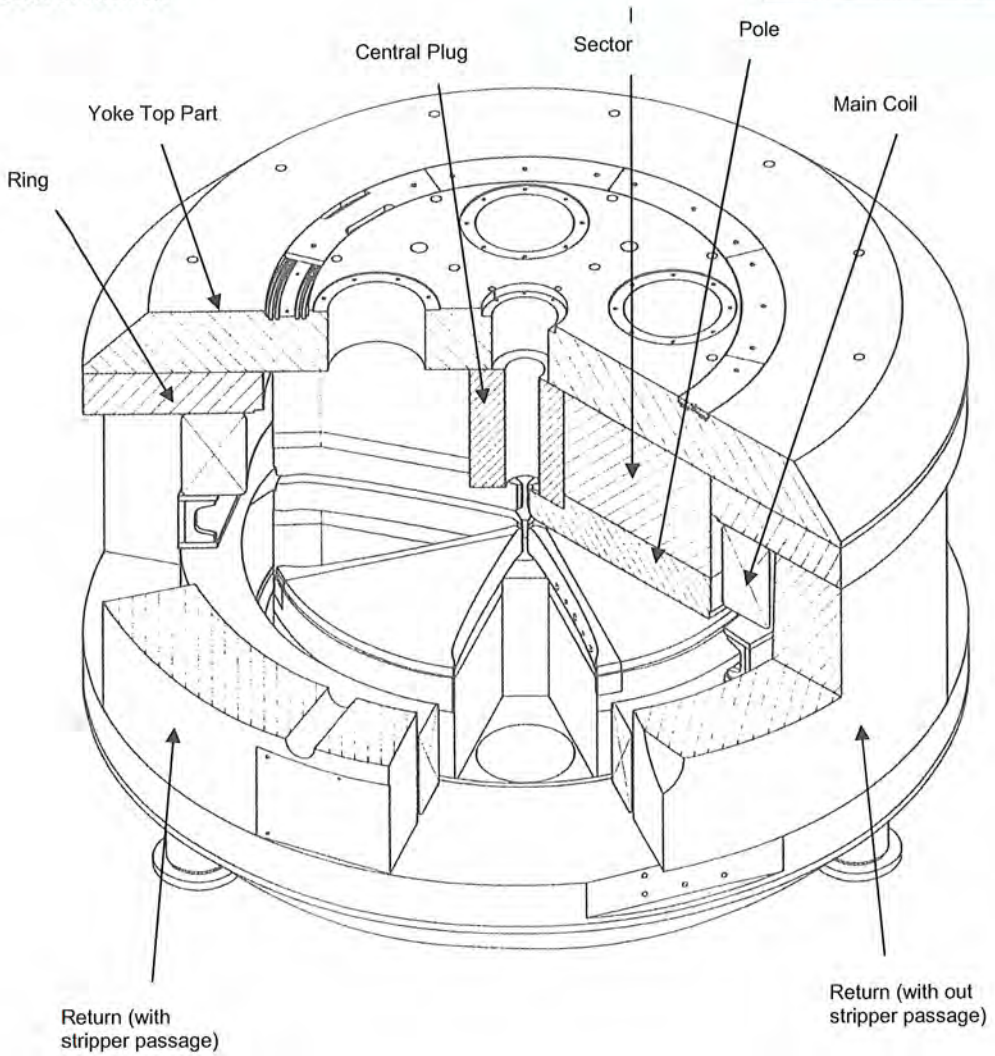

Figure 19 Cyclotron Magnetic Structure

The cyclotron magnetic structure is 2.7m in diameter and is 1.55m high (not including its pedestal legs).

A.8.2 Cyclotron Principles of Operation

The following is an outline of the physical principles behind the operation of the cyclotron.

Hydrogen gas from a cylinder flows into an ion source located on the top of the cyclotron. In the ion source, the gas is dissociated into single atoms and ionised by passing a high electron current through the gas. The ion source is designed to maximise the production of hydrogen ions carrying two electrons i.e. having a single net negative charge.

The negative hydrogen ions are accelerated to an energy of 30 keV vertically downward and formed into weakly defined pulses by a device called a buncher. If a beam stop called the ion source faraday cup (ISFC) is not inserted, the low energy beam is then injected into the centre of the cyclotron where a charged curved metal plate called an inflector bends the beam into the horizontal plane slightly off-centre.

The high vacuum tank of the cyclotron has a vertical magnetic field throughout, which in 360 degrees has four high strength and four low strength areas. The high strength areas are produced by wedge-shaped extended pole pieces and called hill regions. The low strength areas are called valleys.

Due to the charge on the negative hydrogen ion it will move in such a field in an orbit which resembles a square with rounded sides and strongly rounded corners and with a particular frequency called the cyclotron resonance frequency.

In the two opposite valleys are connected copper electrodes (called dees for their historical shape but now more wedge shaped) fed from a 25kW RF power supply with a frequency four times the natural cyclotron resonance frequency of the beam. The voltage on the dees alternates with the RF supply.

A negative-charged hydrogen ion is repeatedly accelerated in the four gaps between the dees and the earthed hills by a 50kV electrical field each time the ion is in the gap and its increasing energy causes the ion to orbit with a greater and greater radius. (The weakly pulsed beam is injected in loose synchronism with the RF supply to maximise the proportion in step with and accelerated by the alternating electric field).

The hill/valley structure of the magnetic field is necessary to keep the beam focussed in the horizontal plane as it moves outward.

To extract a beam with a required energy, a thin graphite foil, called a stripper foil, is introduced at the periphery of the orbiting ions, where the ions have the required energy. As the negative hydrogen ions pass through the foil, the two loosely bound electrons are stripped off changing the ion charge from negative to positive. This causes the orbit to change from anti-clockwise (in this machine as seen from above) to clockwise which results in the positive ion beam being directed out of the machine.

The simple mechanism and very high efficiency of such an extraction system for a negative ion cyclotron is the principal reason for its use. To successfully operate such a system does however required a very good vacuum system as a poor vacuum in the cyclotron tank would have the same effect as the stripper foil, causing large beam losses before reaching the required energy.

The beam lines are aluminium tubes with the interior maintained at a high vacuum by a dedicated diffusion pump. External to the tubes are a series of magnetic components which steer or focus the beam. At points along the beam line, beam diagnostic equipment is installed to locate the beam in two dimensions by means of uncooled electrodes, which produce an electrical current when struck by part of the beam. These probes can only dissipate low powers. At other points, faraday cups are installed. These are removable water-cooled, electrically isolated, tungsten or tantalum plates, which can dissipate full beam power and are used to measure beam transport efficiency to that point on the beam line.

The vacuum of beam lines can be isolated from the cyclotron vacuum by valves. The control system will not permit a beam to bombard a closed vacuum valve. Should an operator error cause a vacuum valve to be bombarded, the vacuum will be lost and the beam will cease.

Product was irradiated at the target stations, which are at the end of the beam lines. Irradiated product was conveyed to hotcells using tubular target transfer systems.